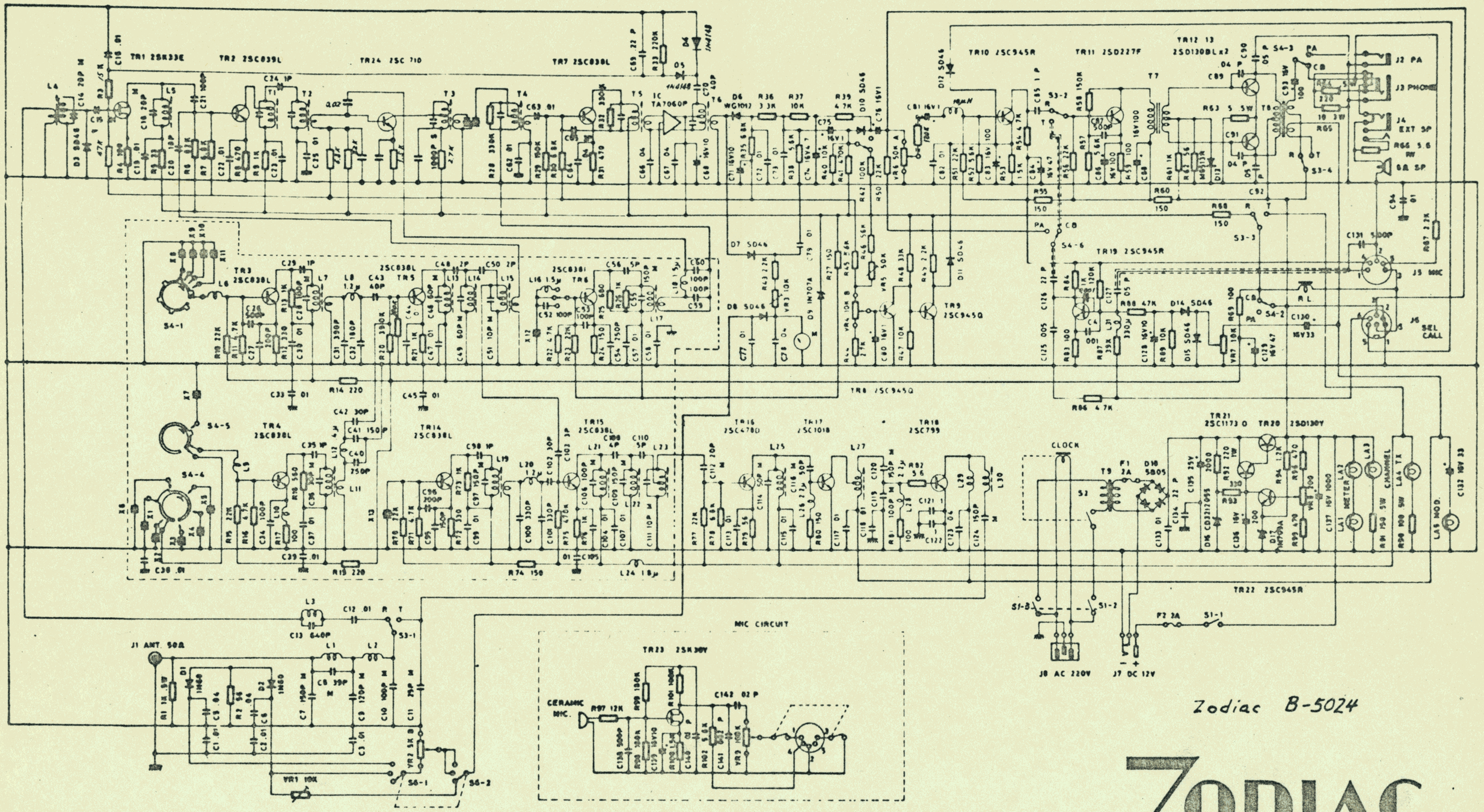

Zodiac B-5024

ZODIAC SVENSKA AB

Another quality scan / PDF conversion brought to you by www.rigpix.com