SERVICE MANUAL

ROTEL

VEHICLE COMMUNICATION SERIES

FM Citizens' Band Transceiver

RVC-240

CONTENTS

Alignment Procedure
- Measurement Condition 2
- Test Equipment 2
- PLL Circuit Alignment 2
- Transmitter Alignment 2
- Receiver Alignment 2

Specifications 3

Circuit Description
- TX and RX Frequency Synthesizer 3
- Transmitter Circuit 4
- ALC Circuit 4
- RF Power Meter 4
- Receiver Circuit 4
- Squelch Circuit 4
- Signal Meter 4

Frequency Table 4

Block Diagram 5

PC Board Layout
- PTLD014 5
- PTSW154 5
- PTBM134 6

Schematic Diagram 7

Replacement Parts List 8

Exploded View 12

THE ROTEL CO., LTD.

1-36-8, Ohokayama, Meguro-ku, Tokyo 152, Japan

ALIGNMENT PROCEDURE

1. Measurement Condition

1) Reference Temperature : 25°C
2) Reference Humidity : 65%
   Note: Unless otherwise mentioned, alignment may be performed under the room temperature of 5 – 35°C and the room humidity of 45 – 85%.
3) Power Supply
   13.2 V DC ±1%, unless otherwise specified.

2. Test Equipment

Any test equipment to be used in this alignment should have its known accuracy and capability to operate within a range of specified tolerance described in the electrical specifications.

1)	AF Signal Generator	OSC	Sine wave, 10 Hz to 20 kHz
2)	VTVM	VTVM	1 mV measurable
3)	DC Current Meter	A	DC 2 A, low impedance
4)	Regulated Power Supply	B	DC 0 – 20 V, more than 2 A
5)	Frequency Counter	FC	0 – 40 MHz, high input impedance, high input sensitivity type
6)	RF VTVM	VTVM	Probe type
7)	Synchroscope (Oscilloscope)	CRT	Up to 30 MHz usable, high sensitivity, high input impedance
8)	Standard Signal Generator	SSG	With 27 MHz FM, 50 ohm unbalanced, -10 to +10 dB ATT.
9)	RF Wattmeter	W	Thermo-couple type, 50 ohm, 0.5 to 5 W
10)	Linear Detector	DET	27 MHz, filter: 50 Hz/20 kHz, de-emphasis: 70 μs
11)	Dummy Load	R	8 ohm, 5 W
12)	Circuit Tester	T	DC 20 kohm/V, high input impedance
13)	High Pass Filter	HPF	
14)	Spectrum Analyzer	SPA	0 – 100 MHz, 0 – 1,000 MHz HP

3. PLL Circuit Alignment

3.1 [10.24 MHz] Adjustment

1) Connect frequency counter to Q-10 base.
2) Adjust CT-2 for 10.24046 MHz ± 50 Hz.

Note: This alignment must be done with delta tune switch set to "0". Verify that the frequency reading with delta tune switch set to "+" is 400 Hz higher than 10.24046 MHz. Verify that the frequency reading with delta tune switch set to "–" is 400 Hz lower than 10.24046 MHz.

3.2 [VCO] Adjustment

1) Set the unit to receive mode.
2) Select the channel selector to CH. 40.
3) Connect circuit tester (DC 12 V range) between TP-1 and ground.
4) Rotate T-1 coil clockwise so that the tester reading is 4.0 V ± 0.1 V.
5) Set the unit to transmit mode.
6) Repeat above steps 2) and 3), then adjust CT-1 for 4.0 V ± 0.1V.
7) Select the channel selector CH. 1.
8) Check that 1.8 – 2.5 V is obtained on the tester.
9) Set the unit to receive mode, check 1.9 – 2.5 V is obtained on tester.
   Ref: When channel LED is disabled, channel No. 1 is located with the channel selector shaft positioned as shown.

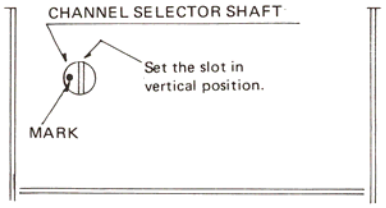

MAIN PC BOARD (PTBM134)

4. Transmitter Alignment

4.1 Test Set-up

Connect testing equipment to the unit as shown:

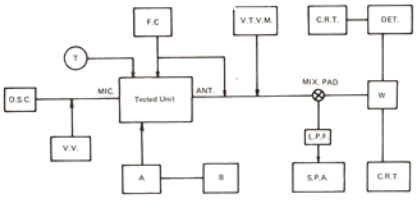

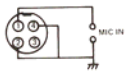

Transmit Dummy Microphone Prewiring

4.2 RF Driver Adjustment

1) Apply 9 V, and set the unit to transmit mode.
2) Select the channel selector CH. 20.
3) Connect synchroscope (or oscilloscope) to antenna.
4) Adjust T-2, T-3 and T-4 for maximum wave form on scope.

4.3 RF Power Adjustment

1) Select the channel selector to CH. 20 and apply 13.2 V, set RF ATT switch to HI (normal).
2) Adjust L-4, L-8 and L-9 for maximum on wattmeter.
3) Rotate L-4 core clockwise to obtain 4.4 W.
4) Rotate L-9 core counterclockwise to obtain 3.8 W.
5) Make sure that the RF power difference of channel 1 and channel 40 should be within 0.3 W.
6) Set RF ATT switch to LO (ON), apply 15.6 V.
7) Set the channel selector to larger RF power of either channel 1 or channel 40.
8) Adjust RV-5 for RF power output approx. 0.5 W.
9) Make sure that RF power should attenuate more than 10 dB on both channel 1 and channel 40.

Notes: a) Adjust above procedure with no modulation.
b) Total current drain should be less than 1.4 A. (Whole circuit: include lamp, LED, etc.)
c) RF power output should be within 3.6 – 4.0 W on all channels.
d) If RF power difference is greater on above step 5), readjust L-8 coil.

4.4 Frequency Check

1) Set the unit to transmit mode with no modulation.
2) Check transmit frequency on all channels, each frequency should be within ±200 Hz of the listed frequency (frequency table).

Note: If above specifications not obtained, check step 3.1 and readjust CT-2.

4.5 Modulation Sensitivity Adjustment

1) Set the linear detector to followings: RF frequency – 27 MHz, AF filter – LPF; 20 kHz, HPF; 50 Hz, De-emphasis – 75 μs, Deviation – 3 kHz, Input level – 0.1 V or 0.3 V.
2) Select the channel selector to CH. 40.
3) Apply 20 mV/1.25 kHz audio to MIC input (jack).
4) Adjust RV-6 for maximum deviation.
5) Adjust RV-2 to exact 2.15 kHz deviation.
6) Adjust RV-6 to exact 1.6 kHz deviation.
7) Select the channel selector to CH. 1.
8) Check the deviation should be more than 1.5 kHz.
9) Apply 2 mV/1.25 kHz audio to MIC input (jack).
10) Check the deviation should be more than 0.8 kHz.

Note: Check no parastic oscillation will occur on scope display when power supply voltage is changed in variation of DC 10.8 V to DC 15.6 V at all channels.

4.6 RF Meter Adjustment

1) Select the channel selector to channel 20.
2) Adjust RV-4 for equal indication on both built-in RF meter and external wattmeter.

5. Receiver Alignment

5.1 Test Set-up

Connect testing equipment to the unit as shown:

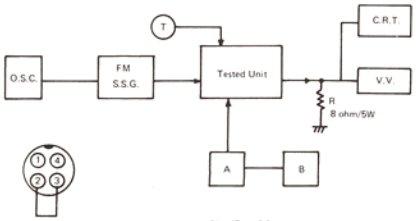

Dummy Microphone Plug Prewiring

5.2 Sensitivity Adjustment

1) Set standard signal generator to 27.79125 MHz without modulation.
2) Connect circuit tester (DC 3 V range) between TP-2 and ground.
3) Adjust T-5, T-7, T-8, T-9, T-10 and T-11 for maximum reading on tester.
   Finally adjustment should be performed with 0.5 microvolt generator output level (RF antenna input level).
4) After completing above procedure, rotate T-5 clockwise 1/2 turn.
5) Set standard signal generator to 27.79125 MHz with 1 kHz audio, ± 0.8 kHz deviation.
6) Observing wave form on synchroscope (or oscilloscope) display, adjust T-12 for maximum on VTVM.
   Note: When rotating T-12, 3 peaks will appear on scope display. Be sure to adjust T-12 to the 2nd peak.

5.3 [20 dB] Noise Quieting Sensitivity

1) Set signal generator output to OFF.
2) Adjust Volume (VR-1) so that AF noise level of the unit is 0.76 V (0 dB) on VTVM.
3) Set signal generator output to ON (without modulation).
4) Adjust signal generator so that VTVM reading is -20 dB, then check signal generator reading should be less than 0.75 μV (-2.7 dB).

5.4 Squelch Adjustment

1) Set signal generator to provide 10 μV (20 dB) with 1 kHz audio 0.8 kHz deviation.
2) Rotate Squelch control (VR-2) fully clockwise (maximum).
3) Adjust RV-1 so that the audio output level decreases by 6 dB.
4) Set RF signal to 0, adjust squelch control so that noise will disappear.
5) Increase RF signal level gradually observing RF input level which just produces audio output. The level should be less than 0.5 μV (-6 dB).

5.5 S-Meter Adjustment

1) Set RF signal to 100 μV (40 dB).
2) Adjust RV-3 so that S-meter pointer indicates "S-9".

SPECIFICATIONS

General

Channels . . . . . .40 digital PLL synthesizer
Frequency Range . . . . . .27.60125 to 27.99125 MHz
Operation Temperature . . . . . .–5°C to +45°C
Power Source . . . . . .10.8 to 15.6 V DC reversible ground (13.2 V nominal)
Current Drain . . . . . .(1) Transmit: 1.5 A
(2) Receiver: 1.2 A

Transmitter

Modulation . . . . . .6F3 (FM)
RF Power Output. . . . . .4 W
Frequency Tolerance . . . . . .< ±1.5 kHz
RF Power Attenuator . . . . . .>10dB
Frequency Response . . . . . .500 to 2,500 Hz +4/–12 dB
Frequency Deviation . . . . . .> ±1.5 kHz at 1,250 Hz
Adjacent Channel Power . . . . . .< 10 microwatt
Spurious Ratio . . . . . .(1) < 50 nW within the following frequency bands:
80 MHz – 85 MHz
87.5 MHz – 118 MHz
135 MHz – 136 MHz
174 MHz – 230 MHz
470 MHz – 862 MHz
(2) < 0.25 microwatt at any other frequency

Receiver

Conversion System . . . . . .Dual conversion superheterodyne
IF . . . . . .10.7 MHz 1st and 455 kHz 2nd
Audio Output Power . . . . . .> 1.5 W into 8 ohm
Sensitivity . . . . . .< 1 microvolt at 20 dB NQ
Adjacent Channel Rejection . . . . > 50 dB
Spurious Emission . . . . . .< 20 nW
Squelch Sensitivity . . . . . .1 to 10 microvolt
Channel Display. . . . . .Digital 7 segment LED's

CIRCUIT DESCRIPITION

1. TX and RX Frequency Synthesizer

a. This unit has equipped with a most advanced phase locked loop (PLL) frequency synthesizing system using only one reference crystal to produce crystal controlled transmit frequencies and RX local oscillator frequencies for 40 CB channels. The frequency synthesizer section consists of one PLL. LSI, VCO (voltage controlled oscillator), Buffer amplifier, Low Pass Filter and a reference oscillator crystal X-1.

b. The VCO comprising Q-1 and D-3 (varicap diode) is adjusted to oscillate at frequency of approx. 17 MHz during RX mode of operation, and at frequency of approx. 13 MHz during TX mode of operation. This frequency change from 17 MHz to 13.9 MHz is achieved by adding CT-1 and C21 to the resonant circuit of the VCO. Namely +B voltage is applied to the base of Q-2 during TX mode, then Q-2 goes on and connects the two capacitors to ground, thus increasing capacitance of the resonance circuit. Since a varicap diode D-3 is connected to the resonance circuit, the VCO's frequency can also be varied by applying a DC voltage to the cathode side of the diode.

c. The channel selector is constructed to produce six digit BCD codes designed for each specified channel (1 to 40) as it is rotated. For example, it generates 100100 when the channel selector is set to channel 9.

d. A specified BCD channel program code is input to ROM (read only memory), when the channel selector is set to a desired channel, the ROM checks its input code by comparing it with the program codes which have been legally assigned and stored in the memory, and pass the code if its input code is not illegal, thus assuring generation of transmit frequencies only assigned by the law.

e. The ROM sets dividing ratio of the programmable divider to thereby create a comparing signal to be sent to the phase detector. Meanwhile, the VCO is being oscillated at approx. 17 MHz. If RX mode is selected and the frequency is applied to the programmable divider through a buffer amplifier Q-25, and divided by the divider with a specified dividing ratio set by the ROM (namely set by the channel selector). For example; if channel 11 is selected, the channel selector provides program code of 000010, and the ROM sets the programmable divider's dividing ratio (N) to 3401. Also assume that VCO is oscillating at 17.0100 MHz, then the 17.0100 MHz is applied to the programmable divider and divided by N = 3401, yielding 5.00147 kHz.

f. Thus produced divided signal (in this example 5.00147 kHz) is next applied to the phase detector and compared with the reference signal in their phase relation. The reference signal is the 5.00022 kHz signal provided by dividing the standard X'tal oscillator frequency of 10.2404 MHz.

g. The phase detector compares its two inputs frequencies (5.00147 kHz and 5.00022 kHz) and develops a pulsated DC signal in proportional phase difference between the two frequencies. The DC signal is led to a low pass filter and the filtered smooth DC voltage is finally applied to the cathode of varicap diode D-3, thus varying the VCO frequency (in this example, lower the frequency).

h. Thus decreased VCO frequency is again applied to the programmable divider and the divided output is compared with the reference frequency. This process is repeated until the divided VCO frequency coincides with the reference frequency in their phase relation.

i. This coincidence is called "Phase-Locked" and once the "Phase-Locked" is established, the VCO frequency is held at that locked frequency unless dividing code N or channel selector is changed. In other word, any frequency can be generated by changing N code number or channel selector position.

j. Thus synthesized VCO frequencies are used as carrier signal after multiplied by two times, during transmit mode of operation, and as injection signals for the first during receive mode of operation.

k. The ROM has been designed to set the programmable divider to channel 9 when pin 9 of PLL IC (IC-1) is set to "H" level. In the actual unit, pin 9 is supplied from VDD line during CH. 9 mode of operation.

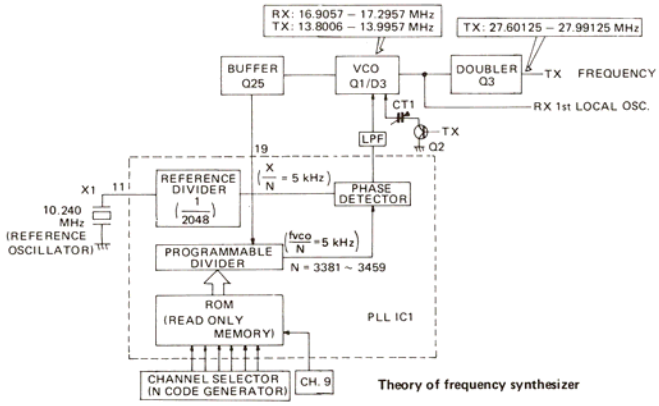

Theory of frequency synthesizer

2. Transmitter Circuit

2.1 Transmitter Circuit

1) When TX switch (PTT) is depressed, DC switch transistor Q-17 is biased and goes on, supplying power to the transmitter circuits.
2) TX switch Q-2 base is also supplied and Q-2 goes on. Thus VCO frequency is changed to 13 MHz as described under "TX and RX frequency synthesizer", and generates specified frequency depending on the channel selector switch being set.
3) The VCO frequency is first led to a doubler circuit consisting of Q-3 and T-2 and doubled, then to the RF preamplifier Q-4, Q-5 and Q-6 to amplify the carrier frequency to a desired power level to transmit. Thus amplified carrier signal is finally led to the antenna connector.
4) On the other hand, voice signal from the microphone is applied to Q-13 preamplifier and the amplified output is further applied to IC-4 (audio power amplifier IC) and amplified. Thus amplified audio output is applied to the narrow band filter amplifier (IC-5 1/2) through C-105, R-72, RV-2, C-113, R-73, R-74 and R-75. The filter amplifier consists of two stages and sharply cut off frequencies higher than approximately 2.5 kHz to obtain required transmit audio frequency characteristic. Thus band limited voice signal is finally applied to another varicap diode D-13 and varies its capacitance value. Since the diode is connected to the VCO's resonance circuit, the VCO frequency or transmit carrier frequency will be frequency-modulated. The potentiometer RV-2 is provided to adjust FM deviation level.

2.2 ALC (Automatic Limiter Circuit)

The ALC consists of a diode D-7 and a switching transistor Q15. The amplified voice signal developed at pin 10 of IC-4 is applied to D-7 through C-105, RV-6 and C-108, the diode rectifies the voice signal and develops negative DC at its anode side. The negative DC is applied to Q-15 base and makes Q-15 conductive, thus bypassing input voice signal to ground if the voice signal amplified becomes excessively high. As the result, the audio output or frequency deviation is maintained at a constant value.

2.3 RF Power Meter

The RF power meter consists of a diode D-12 and an analog meter.
A fraction of RF carrier signal is sampled from the final RF power amplifier stage and is applied to D-12 through C-51. The D-12 rectifies the signal and the resultant DC positive signal is led to a meter, thus indicating the RF power output.

3. Receiver Circuit

3.1 Receiver Circuit

1) When in receive mode, base bias of Q-18 and Q-19 is supplied and both transistors are on. As Q-18 goes on, ALC transistor Q-15 base is short-circuited to ground and Q-15 turns off. As Q-19 goes on, output circuit of the filter amplifier is also shorted to ground and no audio signal is applied to the varicap diode D-13, thus stopping the VCO modulation.
2) Antenna signal is first applied to T-5 through a coupling capacitor C-54 and amplified by Q-7. The amplified output is then applied to each base of Q-8 and Q-9 both of which function as a mixer. While VCO signal (17 MHz signal as described previously) is also applied to the center tap of T-7 secondary coil as an injection signal to convert the RF input signal to 10.695 MHz first IF frequency. Thus obtained 10.695 MHz IF is next applied to 2nd mixer Q-10 and mixed with 10.240 MHz reference oscillator output supplied through C-68, yielding 455 kHz and 2nd IF signal. The 2nd IF signal is fully amplified in passing through two stages of 455 kHz amplifiers Q-11 and Q-12, and finally led to FM IF limiter/detector IC-3 (pin 2). The detected audio signal is then led to the audio amplifier Q-13 base through a volume control and C-91, and amplified with Q-13, then with power amplifier IC-4. Thus obtained audio output drives the built-in speaker.

3.3 Squelch Circuit

Q14 is the squelch control transistor. At low or no antenna signal input, Q-14 conducts heavily. Since Q-14 collector is connected to pin 7 of IC-4 through a small value of resistor, IC-4 is disabled. As the antenna input or IF amplifier output at pin 4 of T-11 increases, D-6 anode side develops negative DC and the DC is applied to Q-14 base. Thus Q-14 goes off as its negative vase bias or antenna input increases, then IC-4 starts to function and produces audio output. The squelch threshold level at which Q-14 is cut off can be varied by adjusting the SQ control volume VR-2.

3.4 Signal Meter

Diode D-11 connected to pin 4 of T-11 develops positive DC. The DC level increases with increased antenna input signal level, so it is used as a meter drive signal in the similar way as described under "RF Power Meter".

3.5. Delta Tune Circuit

(1) Within the delta tune switch placed in "0" position, +12 V line is connected to Q-20 emitter and Q-21 base, then Q-21 goes on and C-124 is grounded through C-126, while Q-20 base bias is being lower than the applied emitter voltage, Q-20 goes off, thus disconnecting C-123 from X-1 crystal.
(2) When the delta tune switch is placed in "–" position, Q-21 emitter and Q-21 base are grounded through the delta tune switch, and Q-20 goes on and Q-21 goes off. Namely C-122 is connected to X-1 but C-214 is disconnected from X-1. As the result, X'tal frequency lowers slightly.
(3) When the switch is set to "+" position, both Q-20 and Q-21 are cut off because of no bias applied to both transistors. Therefore two capacitors C-123 and C-124 are disconnected from X-1, thus increasing reference frequency.
(4) As the crystal reference oscillator frequency shifts slightly, VCO frequency also shifts slightly. As the result, receiving frequency changes slightly.

FREQUENCY TABLE

CH	Channel frequency	Program Code						RX (T/R = 1)		TX (T/R = 0)	
		D_1	D_2	D_3	D_4	D_5	D_6	Divisor	VCO Freq.	Divisor	VCO freq.
1	27.60125	1	0	0	0	0	0	3381	≐16.9057	2760	≐13.8006
2	27.61125	0	1	0	0	0	0	3383	16.9157	2761	13.8056
3	27.62125	1	1	0	0	0	0	3385	16.9257	2762	13.8106
4	27.63125	0	0	1	0	0	0	3387	16.9357	2763	13.8156
5	27.64125	1	0	1	0	0	0	3389	16.9457	2764	13.8206
6	27.65125	0	1	1	0	0	0	3391	16.9557	2565	13.8256
7	27.66125	1	1	1	0	0	0	3393	16.9657	2766	13.8306
8	27.67125	0	0	0	1	0	0	3395	16.9757	2767	13.8356
9	27.68125	1	0	0	1	0	0	3397	16.9857	2768	13.8406
10	27.69125	0	0	0	0	1	0	3399	16.9957	2769	13.8456
11	27.70125	1	0	0	0	0	1	3401	17.0057	2770	13.8506
12	27.71125	0	1	0	0	1	0	3403	17.0157	2771	13.8556
13	27.72125	1	1	0	0	1	0	3405	17.0257	2772	13.8606
14	27.73125	0	0	1	0	1	0	3407	17.0357	2773	13.8656
15	27.74125	1	0	1	0	1	0	3409	17.0457	2774	13.8706
16	27.75125	0	1	1	0	1	0	3411	17.0557	2775	13.8756
17	27.76125	1	1	1	0	1	0	3413	17.0657	2776	13.8806
18	27.77125	0	0	0	1	1	0	3415	17.0757	2777	13.8856
19	27.78125	1	0	0	1	1	0	3417	17.0857	2778	13.8906
20	27.79125	0	0	0	0	0	1	3419	17.0957	2779	13.8956
21	27.80125	1	0	0	0	0	1	3421	17.1057	2780	13.9006
22	27.81125	0	1	0	0	0	1	3423	17.1157	2781	13.9056
23	27.82125	1	1	0	0	0	1	3425	17.1257	2782	13.9106
24	27.83125	0	0	1	0	0	1	3427	17.1357	2783	13.9156
25	27.84125	1	0	1	0	0	1	3429	17.1457	2784	13.9206
26	27.85125	0	1	1	0	0	1	3431	17.1557	2785	13.9256
27	27.86125	1	1	1	0	0	1	3433	17.1657	2786	13.9306
28	27.87125	0	0	0	1	0	1	3435	17.1757	2787	13.9356
29	27.88125	1	0	0	1	0	1	3437	17.1857	2788	13.9406
30	27.89125	0	0	0	0	1	1	3439	17.1957	2789	13.9456
31	27.90125	1	0	0	0	1	1	3441	17.2057	2790	13.9506
32	27.91125	0	1	0	0	1	1	3443	17.2157	2791	13.9556
33	27.92125	1	1	0	0	1	1	3445	17.2257	2792	13.9606
34	27.93125	0	0	1	0	1	1	3447	17.2357	2793	13.9656
35	27.94125	1	0	1	0	1	1	3449	17.2457	2794	13.9706
36	27.95125	0	1	1	0	1	1	3451	17.2557	2795	13.9756
37	27.96125	1	1	1	0	1	1	3453	17.2657	2796	13.9806
38	27.97125	0	0	0	1	1	1	3455	17.2757	2797	13.9856
39	27.98125	1	0	0	1	1	1	3457	17.2857	2798	13.9906
40	27.99125	0	0	0	0	0	0	3459	17.2957	2799	13.9956

BLOCK DIAGRAM

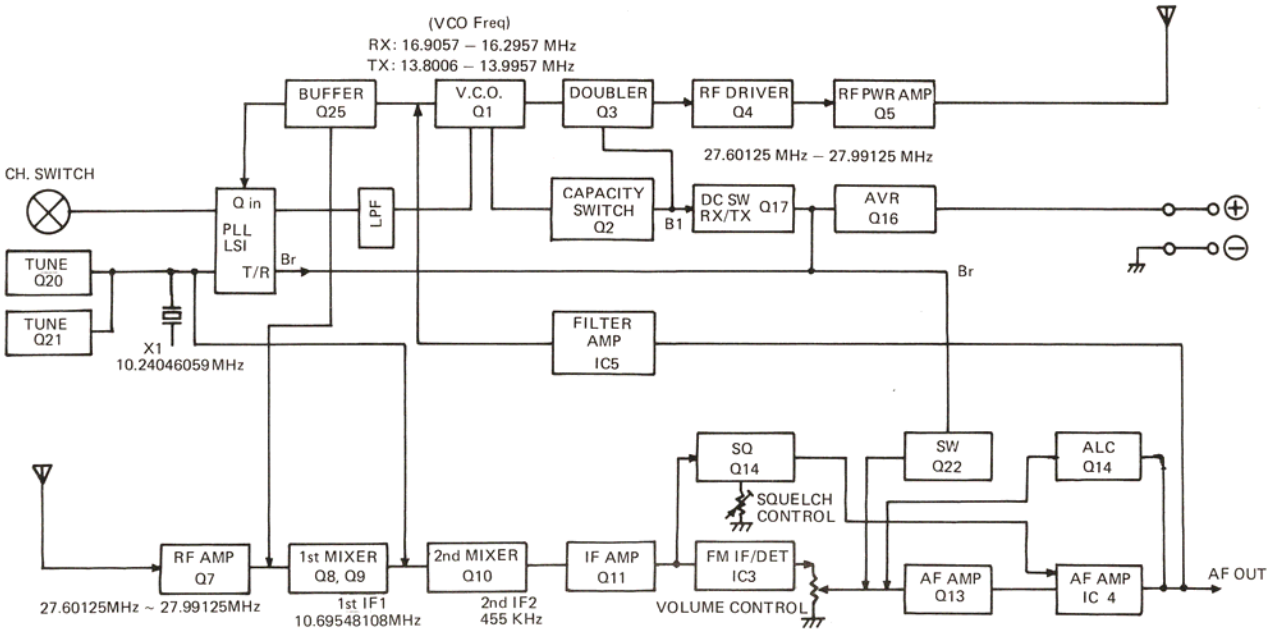

PC BOARD LAYOUT

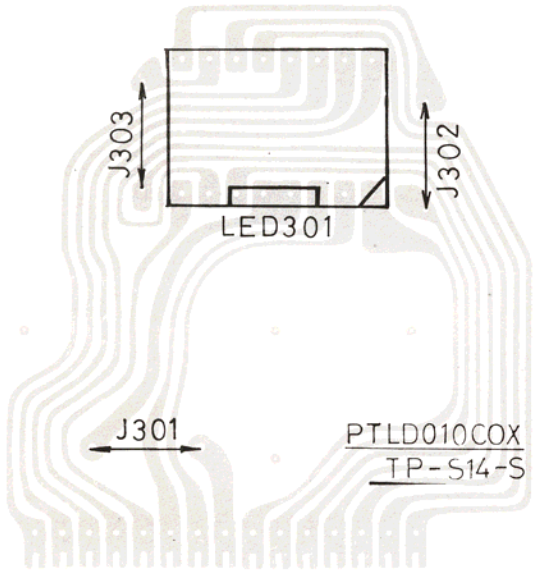

PTLD014

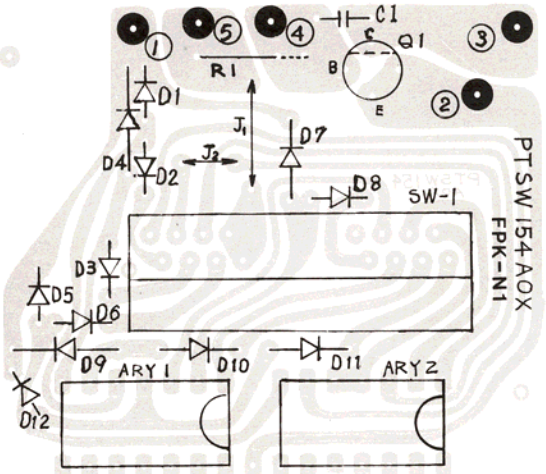

PTSW154

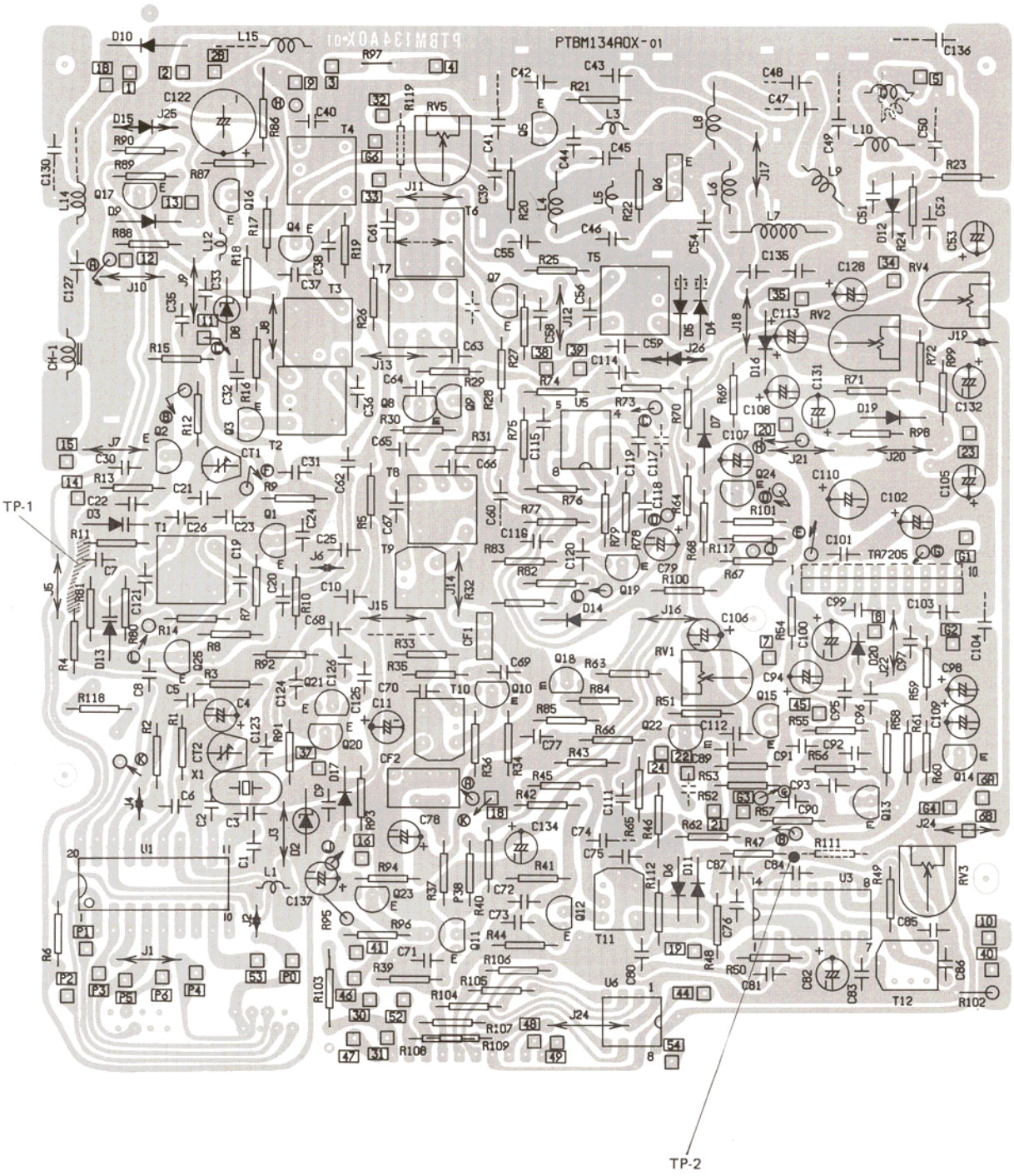

PTBM134

SCHEMATIC DIAGRAM

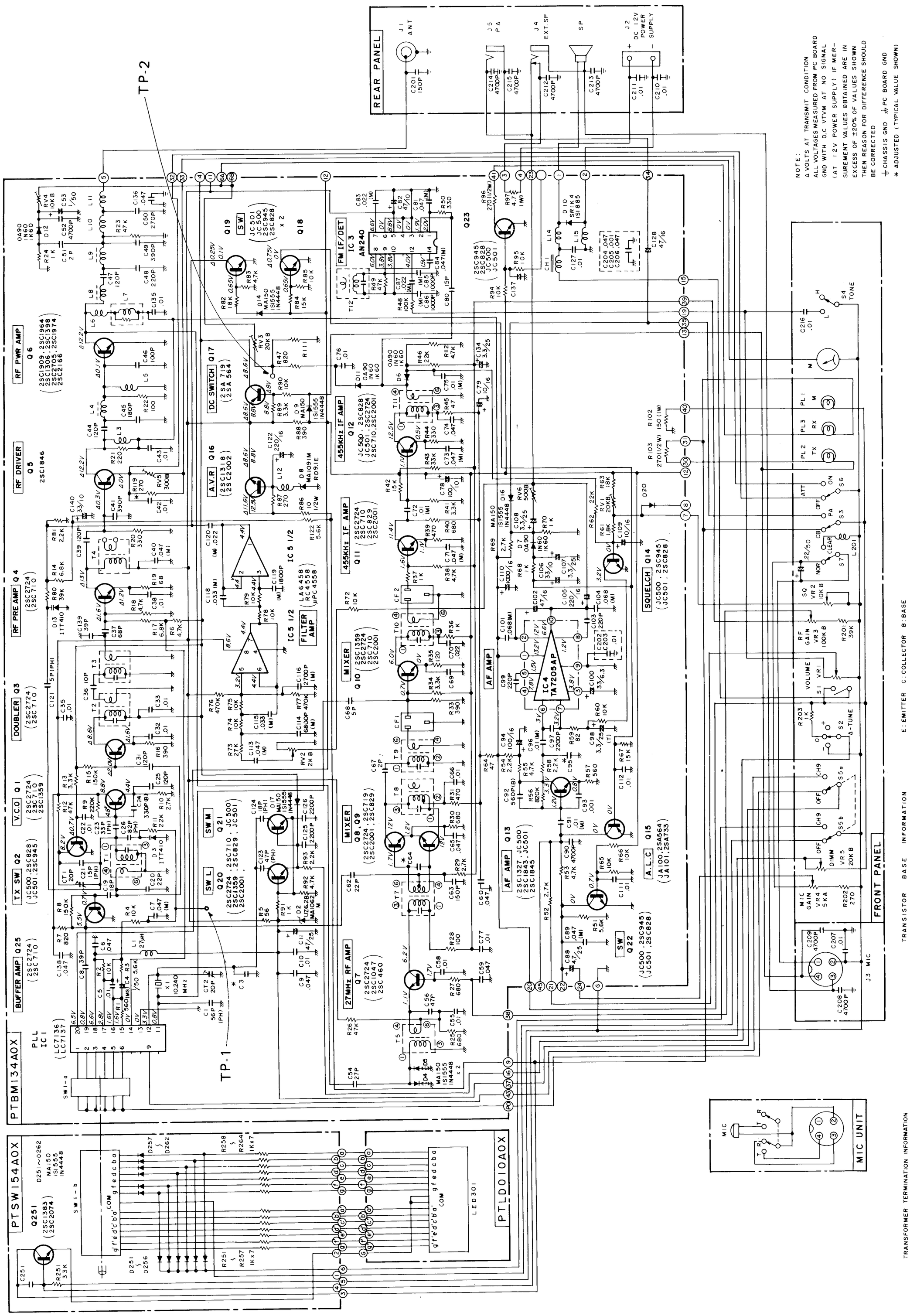

REPLACEMENT PARTS LIST

PART NO.	PART NAME	SPECIFICATIONS	SYMBOLIC OR EXPLODED VIEW NO.
ACCN019GEA	CONN CORD ASSY.		
ACCN020GEA	CONN CORD ASSY.		
APTBM134UG	P.W. BOARD ASSY.		
APTLD010DA	P.W. BOARD ASSY.		
APTSW154HA	P.W. BOARD ASSY.		
CCDE151K0M	CERAMIC CAP.	150 pF 500V	C201
CEAGR22ZMN	ELYT. CAPACITOR	0.22 μF 50V MS	C216
CKDB103PEM	CERAMIC CAP.	0.01 μF 50V	C202/C203/C205/C207/C210/C211
CKDB472PEM	CERAMIC CAP.	4700 pF 50V	C208/C209/C212/C213/C214/C217
CKDB473ZFM	CERAMIC CAP.	0.047 μF 50V	C204/C206
CQMB103KEH	MYLAR CAPACITOR	0.01 μF 50V	C215
GALP3UKA04	WIRES KIT		
RD25TJ102X	CARBON FILM R.	0.25W 1K ohm	R201
RD25TJ271X	CARBON FILM R.	0.25W 270 ohm	R203
RD25TJ393X	CARBON FILM R.	0.25W 39K ohm	R202
RVNA103B06	VR.	10K ohm B-CURVE 16M/M 1-GANG	VR2
RVNA104B02	VR.	100K ohm B-CURVE 16M/M 1-GANG	VR3
RVNA203B03	VR.	20K ohm B-CURVE 16M/M 1-GANG	VR5
RVNA502A06	VR.	5K ohm A-CURVE 16M/M 1-GANG	VR4
RVNB503A04	VR.	50K ohm A-CURVE 16M/M 1-GANG	VR1/S1
SS020220ZL	SLIDE SWITCH		S3/S4/S5/S6/S7
SS020303ZL	SLIDE SWITCH		S2
YJB02S007Z	DC JACK		J2
YJC02S009Z	JACK		J1
YJT03S003Z	3P JACK		J4/J5
YJZ04S008Z	4P MIC JACK		J3
ZMJ2030N06	METER		M
ZPA064139U	LAMP		PL2/PL3
ZQA0770807	SPEAKER		SP
AMRVC24001	FRAME ASSY.		1
BRT2635CAX	THIN HEAD RIVET	2.6 x 3.5 ALMINUM	B11-1/B11-2
BSPB2003NN	BIND HEAD SCREW	+ BIT, M2 x 3	B3-1/B3-10/B3-11/B3-12/B3-2/B3-3/B3-4/ B3-5/B3-6/B3-7/B3-8/B3-9
BSPB2606NN	BIND HEAD SCREW	+ BIT, M2.6 x 6	B4-1/B4-2
BSPB3006NN	BIND HEAD SCREW	+ BIT, M3 x 6	B10-1/B10-2/B6/B7-1/B7-2/B8-1/B8-2/ B8-3/B8-4/B9-1/B9-2/B9-3/B9-4
BSPB3008NB	BIND HEAD SCREW	+ BIT, M3 x 8	B5-1/B5-2/B5-3
BSPL3006NB	BIND NAIL SCREW	+ BIT, M3 x 6	B12-1/B12-2/B12-3/B12-4/B12-5/B12-6/B12-7/B12-8
BSPS2605NN	FLAT HEAD SCREW	+ BIT, M2.6 x 5	B1-1/B1-2/B1-3/B1-4/B1-5/B1-6
BTPX3008BZ	I.T BT SCREW	+ BIT, M3 x 8	B2-1/B2-2/B2-3/B2-4
MB762SL008	FRONT PANEL		4
ML121SZ007	BRACKET		11-1/11-2/11-3
ML471SZ002	BRACKET		10
ML522BN001	TERMINAL		14
MS806BN001	TERMINAL		16
MT213BD014	SUPPORT		9
MU243SZ002	BRACKET		8
MU677SZ119	CHASSIS		5
MU773SM102	CASE A		6
MU773SM103	CASE B		7
MVSRVC2401	SER NO PLATE		19
VF176DN002	WASHER		13-1/13-2
VM165RX001	HOLDER		15-1/15-2
VN276SM041	VR KNOB		3-1/3-2/3-3/3-4/3-5
VN286SM019	CH KNOB		2
VS205FB002	SPECER		18
VS605FB001	BARRIER		12-1/12-2
VS706YB006	SHEET		17-1/17-2/17-3/17-4/17-5/17-6
KC000264XX	SCHEMATIC SHEET		
KTRVC240AX	OWNER'S MANUAL		
KF091700E4	POLY BAG		
KF232200E4	POLY BAG		
KF303000E6	POLY BAG		
KKRVC24001	DISPLAY BOX		
ACDC082GEA	DC CORD ASSY		
BTPP4010BN	PAN TAP SCREW	+ BIT, M4 x 10	
BTPT5013AZ	TRUSS TAP SCREW	+ BIT, M5 x 13	
BWG50A06SW	OT. LOCK WASHER	OUTSIDE TOOTHED, 5M/M S-ZN	
BWU40855SW	IT. LOCK WASHER	INSIDE TOOTHED, 4 M/M S-ZN	
MF284SN001	SCREW		
MU276SW002	HANDLE		
MZ331SZ002	HOLDER		
ZGAAZ501K0	MICROPHONE		
KMRVC24001	MASTER CARTON		

PART NO.	PART NAME	SPECIFICATIONS	SYMBOLIC OR EXPLODED VIEW NO.
VE76JSM127	FRAME		1-A
VS637AK007	FILTER		1-B
BSPB3006NN	BIND HEAD SCREW	+ BIT, M3 x 6	
BSPP3006NT	PAN HEAD SCREW	+ BIT, M3 x 6 PLASTIC	
BSPU3008NN	THIN BIND SCREW	+ BIT, M3 x 8	
CCDB121K0M	CERAMIC CAP.	120 pF 50V	C39
CCDB181K0M	CERAMIC CAP.	180 pF 50V	C45
CCDB220K0M	CERAMIC CAP.	22 pF 50V	C20
CCDB221K0M	CERAMIC CAP.	220 pF 50V	C48/C99
CCDB330KPM	CERAMIC CAP.	33 pF 50V	C23
CCDB390K0M	CERAMIC CAP.	39 pF 50V	C139
CCDB391K0M	CERAMIC CAP.	390 pF 50V	C49
CCDB680K0M	CERAMIC CAP.	68 pF 50V	C37
CCDB820KPM	CERAMIC CAP.	82 pF 50V	C26
CCFB020C0M	CERAMIC CAP.	SL 2 pF 50V	C51/C67
CCFB050CPM	CERAMIC CAP.	PH 5 pF 50V	C121
CCFB050C0M	CERAMIC CAP.	SL 5 pF 50V	C68
CCFB100D0M	CERAMIC CAP.	SL 10 pF 50V	C36
CCFB101K0M	CERAMIC CAP.	100 pF 50V	C46
CCFB121K0M	CERAMIC CAP.	120 pF 50V	C25/C31/C44/C47
CCFB150KPM	CERAMIC CAP.	15 pF 50V	C21
CCFB150K0M	CERAMIC CAP.	15 pF 50V	C80
CCFB151K0M	CERAMIC CAP.	150 pF 50V	C63
CCFB180KPM	CERAMIC CAP.	18 pF 50V	C124
CCFB180K0M	CERAMIC CAP.	18 pF 50V	C19
CCFB220K0M	CERAMIC CAP.	22 pF 50V	C62
CCFB221K0M	CERAMIC CAP.	220 pF 50V	C103
CCFB270K0M	CERAMIC CAP.	27 pF 50V	C54
CCFB271K0M	CERAMIC CAP.	270 pF 50V	C50
CCFB390K0M	CERAMIC CAP.	39 pF 50V	C8
CCFB391K0M	CERAMIC CAP.	390 pF 50V	C41
CCFB470KPM	CERAMIC CAP.	47 pF 50V	C123
CCFB470K0M	CERAMIC CAP.	47 pF 50V	C56
CCFB560KPM	CERAMIC CAP.	56 pF 50V	C1
CEAB330ALX	ELYT. CAPACITOR	33 μF 6.3V	C100
CEAC101ALX	ELYT. CAPACITOR	100 μF 10V	C78
CEAC330ALX	ELYT. CAPACITOR	33 μF 10V	C140
CEAC470ALX	ELYT. CAPACITOR	47 μF 10V	C82
CEAD100ALX	ELYT. CAPACITOR	10 μF 16V	C109/C79
CEAD101ALX	ELYT. CAPACITOR	100 μF 16V	C94
CEAD221ALX	ELYT. CAPACITOR	220 μF 16V	C105/C122
CEAD470ALX	ELYT. CAPACITOR	47 μF 16V	C128
CEAE3R3ALX	ELYT. CAPACITOR	3.3 μF 25V	C108/C134
CEAE4R7ALX	ELYT. CAPACITOR	4.7 μF 25V	C88
CEAE470ZLS	ELYT. CAPACITOR	47 μF 25V SP	C11
CEAG010ZMN	ELYT. CAPACITOR	1 μF 50V MS	C4
CEED102ALX	ELYT. CAPACITOR	1000 μF 16V	C110
CEVC330ALX	ELYT. CAPACITOR		C106
CEVD470ALX	ELYT. CAPACITOR		C102
CEVE3R3ALX	ELYT. CAPACITOR		C107
CEVG010ALX	ELYT. CAPACITOR		C53
CKDB103PEM	CERAMIC CAP.	0.01 μF 50V	C111/C135/C22/C33/C35/C5/C66/C77
CKDB222PEM	CERAMIC CAP.	2200 pF 50V	C126/C97
CKDB223ZFM	CERAMIC CAP.	0.022 μF 50V	C70
CKDB331KBM	CERAMIC CAP.		C24
CKDB472PEM	CERAMIC CAP.	4700 pF 50V	C52
CKDB473ZFM	CERAMIC CAP.	0.047 μF 50V	C130/C136/C138/C59/C6/C74/C9
CKDB561KBM	CERAMIC CAP.	560 pF 50V	C92
CKFB102PEM	CERAMIC CAP.	1000 pF 50V	C93
CKFB103PEM	CERAMIC CAP.	0.01 μF 50V	C10/C112/C127/C30/C32/C38/C42/C43/C55/ C58
CKFB222PEM	CERAMIC CAP.	2200 pF 50V	C125
CKFB472PEM	CERAMIC CAP.	4700 pF 50V	C90
CKFB473ZFM	CERAMIC CAP.	0.047 μF 50V	C60/C65
CQMB102KEH	MYLAR CAPACITOR	1000 pF 50V	C85
CQMB102KTH	MYLAR CAPACITOR	1000 pF 50V	C86
CQMB103KEH	MYLAR CAPACITOR	0.01 μF 50V	C72/C91
CQMB103KTH	MYLAR CAPACITOR	0.01 μF 50V	C75/C76/C96
CQMB182KEH	MYLAR CAPACITOR	1800 pF 50V	C119
CQMB223KEH	MYLAR CAPACITOR	0.022 μF 50V	C87
CQMB223KTH	MYLAR CAPACITOR	0.022 μF 50V	C120/C83
CQMB272KEH	MYLAR CAPACITOR	2700 pF 50V	C116
CQMB333KEH	MYLAR CAPACITOR	0.033 μF 50V	C115
CQMB333KTH	MYLAR CAPACITOR	0.033 μF 50V	C118

PART NO.	PART NAME	SPECIFICATIONS	SYMBOLIC OR EXPLODED VIEW NO.
CQMB473KEH	MYLAR CAPACITOR	0.047 μF 50V	C113/C40/C7/C89
CQMB473KTH	MYLAR CAPACITOR	0.047 μF 50V	C71/C73/C81/C84
CQMB682KEH	MYLAR CAPACITOR	6800 pF 50V	C114
CQMB683KEH	MYLAR CAPACITOR	0.068 μF 50V	C101/C104
CSSE3R3MDC	TANTALUM CAP.	3.3 μF 25V	C98
CTZ6200H01	TRIMMER CAP.		CT-1/CT-2
FBR455A24P	CERAMIC FILTER		CF2
FB10R7A01M	CERAMIC FILTER		CF1
LA1JG1010A	CHOKE COIL		L10
LA1KE1011A	RF COIL		L6
LA1KE1211A	RF COIL		L11
LDADB4024B	RF COIL		L14/L15
LDADX3825M	RF COIL		L7
LF124KC01S	RF COIL		L16
LF2R2KD01N	RF COIL		L3
LF270KD01N	RF COIL	27μH	L1
LF680KD01N	RF COIL		L12/L5
LJ119H001Y	CHOKE COIL		CH-1
MB644SX002	SHIELD CASE		
ML454AD001	HEAT SINK		
MS327AD004	HEAT SINK		
MU453AD001	HEAT SINK		
MW401CX001	SHORT JUMPER	JW-10	
MW401CX003	SHORT JUMPER		
MW401CX004	SHORT JUMPER	JW-5	
PTBM134A0X	PRINTED W. BOARD		
QDCTT410XQ	VARI-CAP. DIODE	1TT410 12V NO-RANK 26MIN	D13/D3
QDG0A90XXN	GERMANIUM DIODE	0A90 NO-RANK	D11/D12/D6/D7
QDSMA150XN	SILICON DIODE	MA150 VF 1.2V, VR 35V NO-RANK 24MIN	D14/D16/D17/D4/D5/D9
QDSSR1K4AP	SILICON DIODE	SR1K4LF VR 200 A-RANK 9MIN	D10
QDZA1062MN	ZENER DIODE	MA1062M	D2
QDZA1091MN	ZENER DIODE	MA1091M	D8
QQMAN240PN	I.C.	AN240P	IC3
QQM06458AC	I.C.	LA6458	IC5
QQM07205ET	I.C.	TA7205	IC4
QQ007137AC	I.C.	LC7137	IC1
QTAJA100BQ	TRANSISTOR	JA100 PORQ-RANK	Q15
QTA0719XHN	TRANSISTOR	2SA719 P,Q,R-RANK	Q17
QTCJC500BQ	TRANSISTOR	JC500 P,Q-RANK	Q12/Q14/Q2
QTCJC500DQ	TRANSISTOR	JC500 O,P,Q-RANK	Q18/Q19/Q20/Q21/Q22/Q23
QTC1318XDN	TRANSISTOR	2SC1318 Q,R-RANK	Q16
QTC1327XBN	TRANSISTOR	2SC1327 T-RANK	Q13
QTC1359XBN	TRANSISTOR	2SC1359 B,C-RANK	Q10
QTC1846XAN	TRANSISTOR	2SC1846 Q,R,S-RANK	Q5
QTC1909XBA	TRANSISTOR	2SC1909 Q,R-RANK	Q6
QTC2724XDE	TRANSISTOR	2SC2724 D-RANK	Q1
QTC2724XFE	TRANSISTOR	2SC2724 C,D-RANK	Q11/Q25/Q3/Q4/Q7/Q8/Q9
RD25PJ101X	CARBON FILM R.	0.25W 100 ohm	R22/R28
RD25PJ102X	CARBON FILM R.	0.25W 1K ohm	R24/R36/R37/R68/R70/R91
RD25PJ103X	CARBON FILM R.	0.25W 10K ohm	R2/R4/R60/R65/R66/R72/R74/R75/ R78/R79/R85/R90/R94
RD25PJ104X	CARBON FILM R.	0.25W 100K ohm	R48
RD25PJ121X	CARBON FILM R.	0.25W 120 ohm	R35
RD25PJ153X	CARBON FILM R.	0.25W 15K ohm	R42/R67/R84
RD25PJ154X	CARBON FILM R.	0.25W 150K ohm	R15/R8
RD25PJ182X	CARBON FILM R.	0.25W 1.8K ohm	R61
RD25PJ183X	CARBON FILM R.	0.25W 18K ohm	R63/R82
RD25PJ221X	CARBON FILM R.	0.25W 220 ohm	R21
RD25PJ222X	CARBON FILM R.	0.25W 2.2K ohm	R54/R58/R81/R93
RD25PJ223X	CARBON FILM R.	0.25W 22K ohm	R11/R46/R62
RD25PJ224X	CARBON FILM R.	0.25W 220K ohm	R9
RD25PJ271X	CARBON FILM R.	0.25W 270 ohm	R119/R87
RD25PJ272X	CARBON FILM R.	0.25W 2.7K ohm	R10/R29/R69
RD25PJ273X	CARBON FILM R.	0.25W 27K ohm	R52/R73
RD25PJ331X	CARBON FILM R.	0.25W 330 ohm	R20/R44/R50
RD25PJ332X	CARBON FILM R.	0.25W 3.3K ohm	R13/R34/R41/R89
RD25PJ333X	CARBON FILM R.	0.25W 33K ohm	R43
RD25PJ391X	CARBON FILM R.	0.25W 390 ohm	R16/R33/R88
RD25PJ393X	CARBON FILM R.	0.25W 39K ohm	R80
RD25PJ470X	CARBON FILM R.	0.25W 47 ohm	R45/R64
RD25PJ471X	CARBON FILM R.	0.25W 470 ohm	R31/R39
RD25PJ472X	CARBON FILM R.	0.25W 4.7K ohm	R18/R38/R53/R6/R83/R92
RD25PJ473X	CARBON FILM R.	0.25W 47K ohm	R12/R23/R26/R49

PART NO.	PART NAME	SPECIFICATIONS	SYMBOLIC OR EXPLODED VIEW NO.
RD25PJ474X	CARBON FILM R.	0.25W 470K ohm	R76/R77
RD25PJ560X	CARBON FILM R.	0.25W 56 ohm	R5
RD25PJ561X	CARBON FILM R.	0.25W 560 ohm	R1/R57
RD25PJ562X	CARBON FILM R.	0.25W 5.6K ohm	R3/R51/R122
RD25PJ680X	CARBON FILM R.	0.25W 68 ohm	R19
RD25PJ681X	CARBON FILM R.	0.25W 680 ohm	R25/R27/R30/R40
RD25PJ682X	CARBON FILM R.	0.25W 6.8K ohm	R17
RD25PJ820X	CARBON FILM R.	0.25W 82 ohm	R59
RD25PJ821X	CARBON FILM R.	0.25W 820 ohm	R47/R7
RD25PJ824X	CARBON FILM R.	0.25W 820K ohm	R56
RD25TJ472X	CARBON FILM R.	0.25W 4.7K ohm	R55
RD25TJ682X	CARBON FILM R.	0.25W 6.8K ohm	R14
RD25T0000X	CARBON FILM R.	0-OHM STRAITE	
RGHANJ271B	M-OXIDE FILM R.	1/2W 270 ohm	R103/R96
RG1ANJ151B	M-OXIDE FILM R.	1W 150 ohm	R102
RPDNB50104	SUB-MINI VR.		RV6
RPGNB20201	SEMI-FIXED VR.	2K ohm B-CURVE	RV2
RPGNB20301	SEMI-FIXED VR.	20K ohm B-CURVE	RV1/RV3/RV4
RPGNB30101	SEMI-FIXED VR.	300 ohm B-CURVE	RV5
RXHANJ100B	M-OXIDE FILM R.	1/2W 10 ohm	R86
RX1ANJ4R7B	M-OXIDE FILM R.	1W 4.7 ohm	R97
SR2040203H	ROTARY SWITCH		SW-1
TRA5CZ001M	RF COIL		L4
TRA5CZ002M	RF COIL		L8
TRA5CZ003M	RF COIL		L9
TR07LA004N	I.F.T.		T10
TR07LA023N	I.F.T.		T11/T12
TR07MA006N	RF COIL		T9
TR10CA006T	RF COIL		T3
TR10CB003T	R.F.T.		T2
TR10CM003M	RF COIL		T7
TR10CP005S	RF TRANS		T4
TR10DB003M	RF COIL		T1
TR10MA018M	RF COIL		T8
TR10MP003T	RF COIL		T5
VS223RH002	SILICON SHEET		
VS311XX001	BARRIER		
WUG007EEXX	HI-WRAP WIRE		N04
WUG013EEXX	HI-WRAP WIRE		NO8
WUG116EEXX	HI-WRAP WIRE		NO1
WUG218EEXX	HI-WRAP WIRE		NO2
WUG313EEXX	HI-WRAP WIRE		NO3
WUG417EEXX	HI-WRAP WIRE		NO9
WUG611EEXX	HI-WRAP WIRE		NO6
WUG913EEXX	HI-WRAP WIRE		NO10
WUH004AAXX	HI-WRAP WIRE		NO17
XAS1C2006X	XTAL OCILLATOR		X1
YFL0000001	FERRITE CORD		
MW401CX001	SHORT JUMPER	JW-10	
PTLD010C0X	PRINTED W. BOARD		
QL*SL2221C	L.E.D.	SL2221C GREEN COM.-A.	LED
ZZZ0000020	PC JOINT.		
CKDB103PEM	CERAMIC CAP.	0.01μF 50V –0, +100% E	C251
MW401CX004	SHORT JUMPER	JW-5	J2
PTSW154A0X	PRINTED W. BOARD		
QDSMA150XN	SILICON DIODE	MA150 VF 1.2V, VR 35V NO-RANK 24MIN	D251/D252/D253/D254/D255/D256/ D257/D258/D259/D260/D261/D262
QTC1383XAN	TRANSISTOR	2SC1383 Q-RANK	Q251
RD25TJ102X	CARBON FILM R.	0.25W 1K ohm	R251/R252/R253/R254/R255/R256/ R257/R258/R259/R260/R261/R262/ R263/R264
RD25TJ223X	CARBON FILM R.	0.25W 22K ohm	R265

EXPLODED VIEW

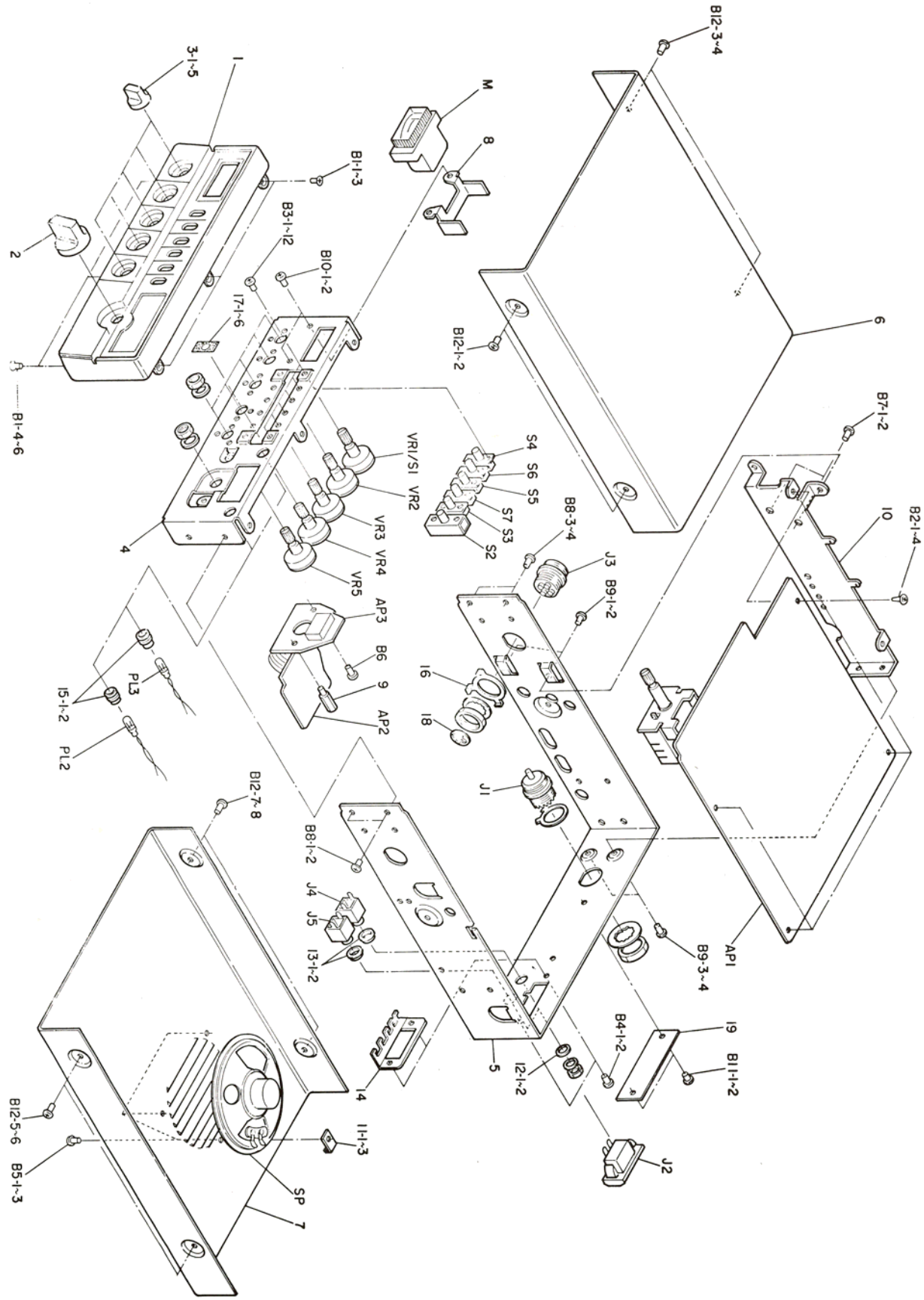

Y-180A-81122M/CAB
PRINTED IN JAPAN