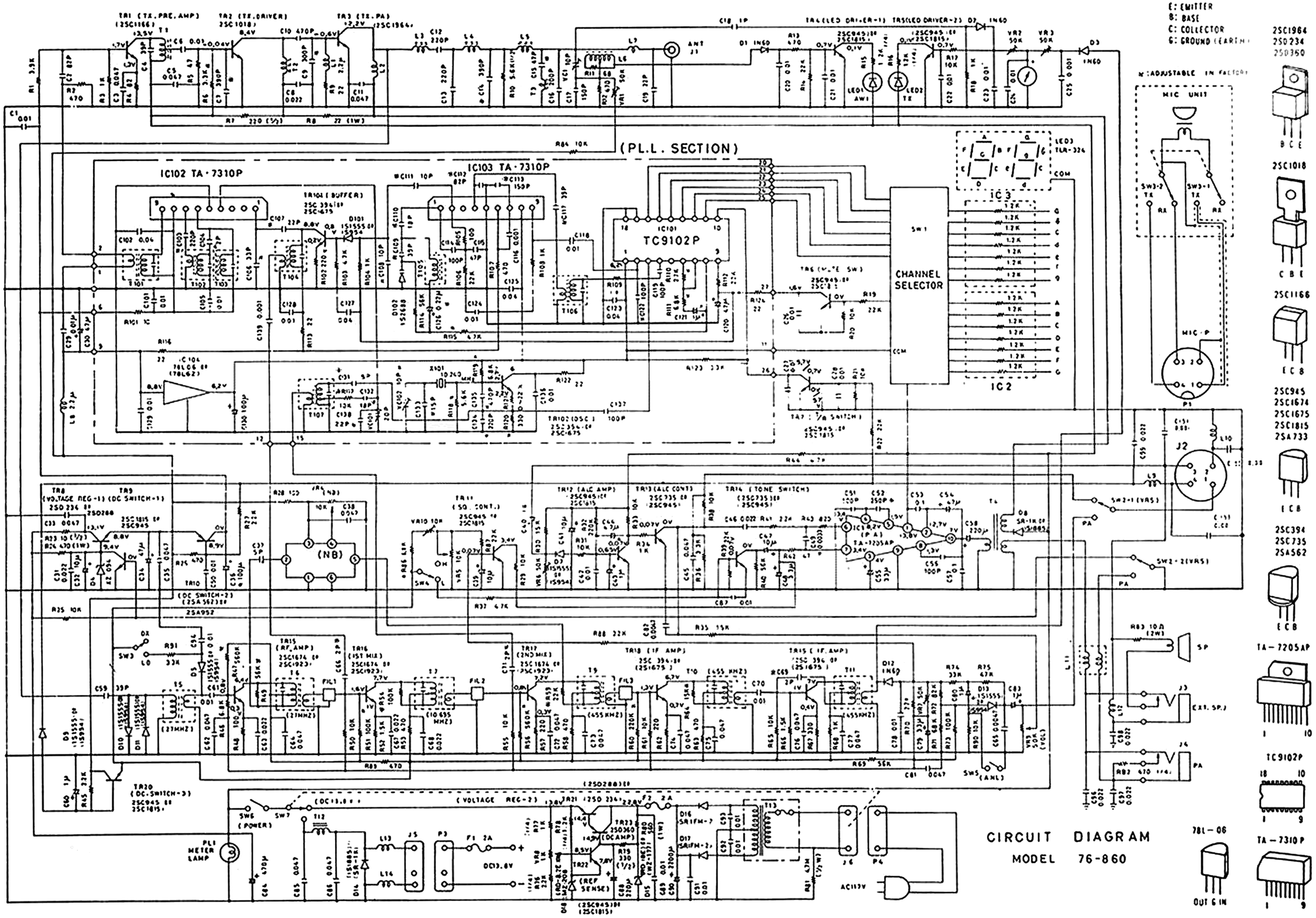

CIRCUIT DIAGRAM

MODEL 76-860