Eagle II

SCHEMATIC DIAGRAM

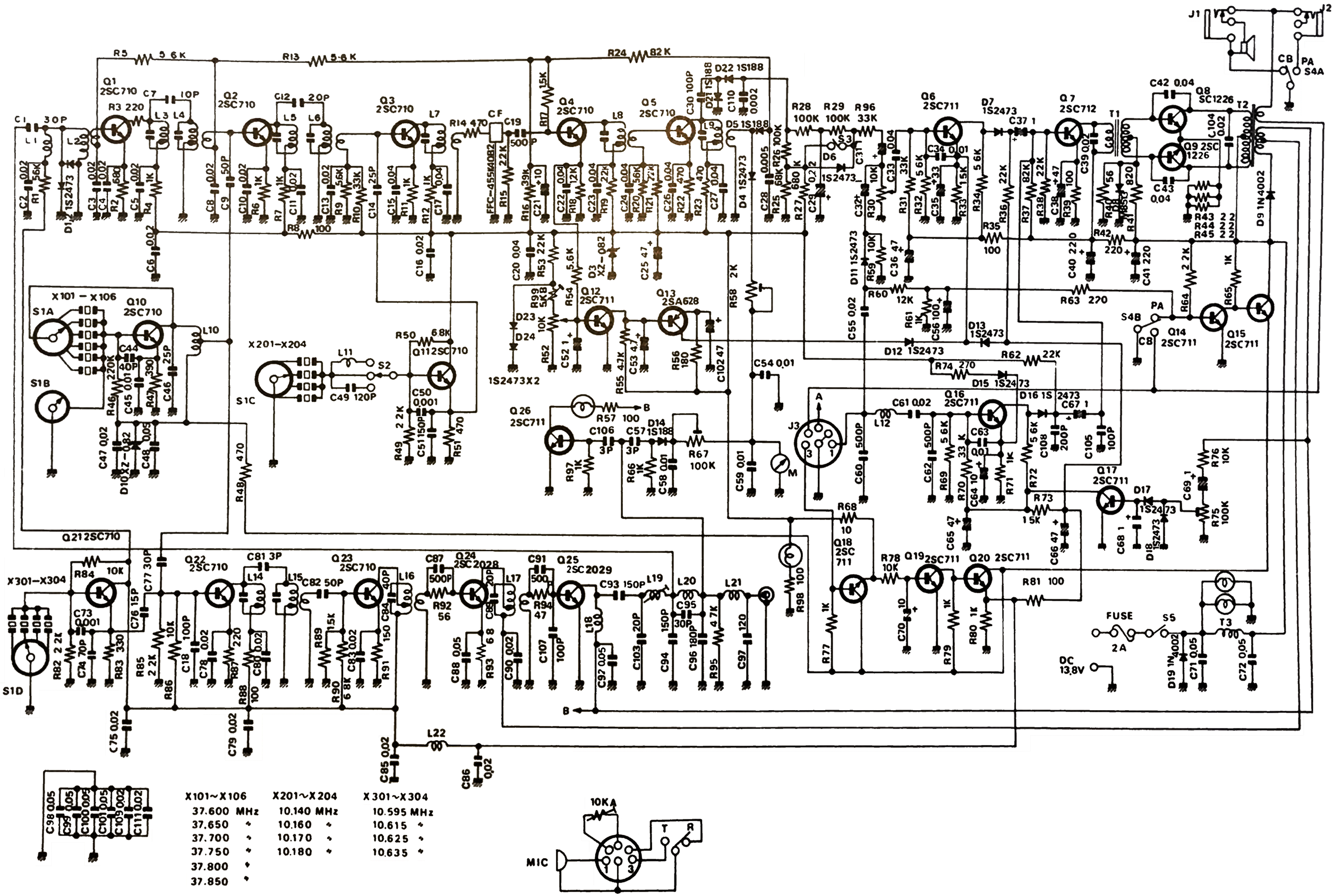

A photocopy cleanup, proudly brought to you by www.rigpix.com